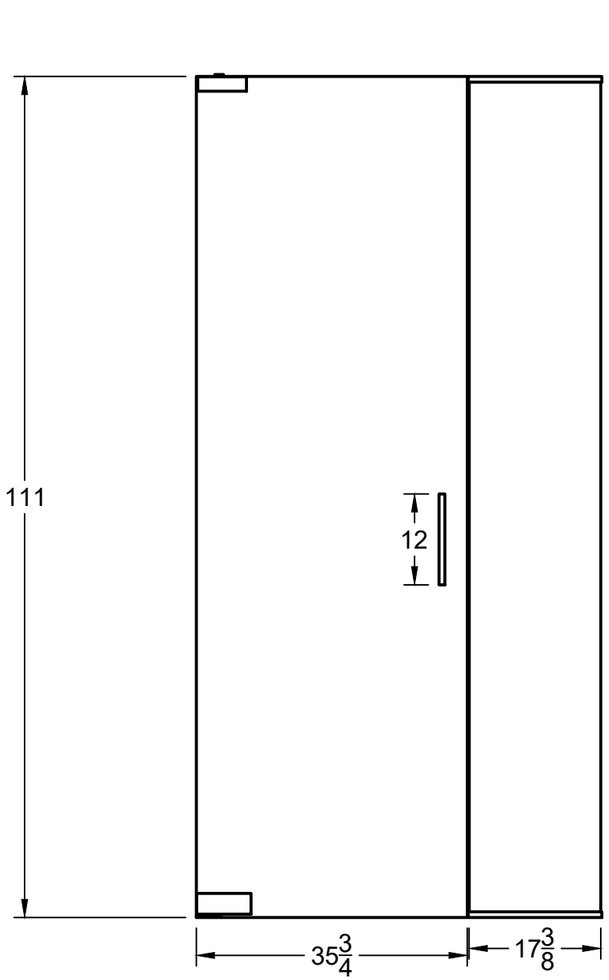

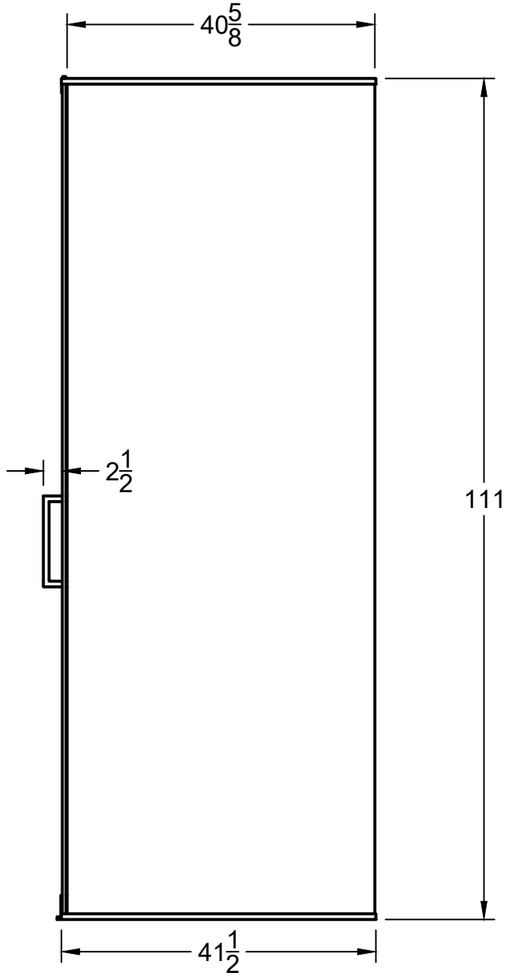

A Crystal Glass & Mirror

PROJECT
A Crystal Glass & Mirror LLC

TITLE
Wine Room 132

APPROVED	SIZE	CODE	DWG NO		REV
CHECKED	B				
DRAWN David Zoque 8/08/2024	SCALE 1:20	WEIGHT		SHEET 1/1	